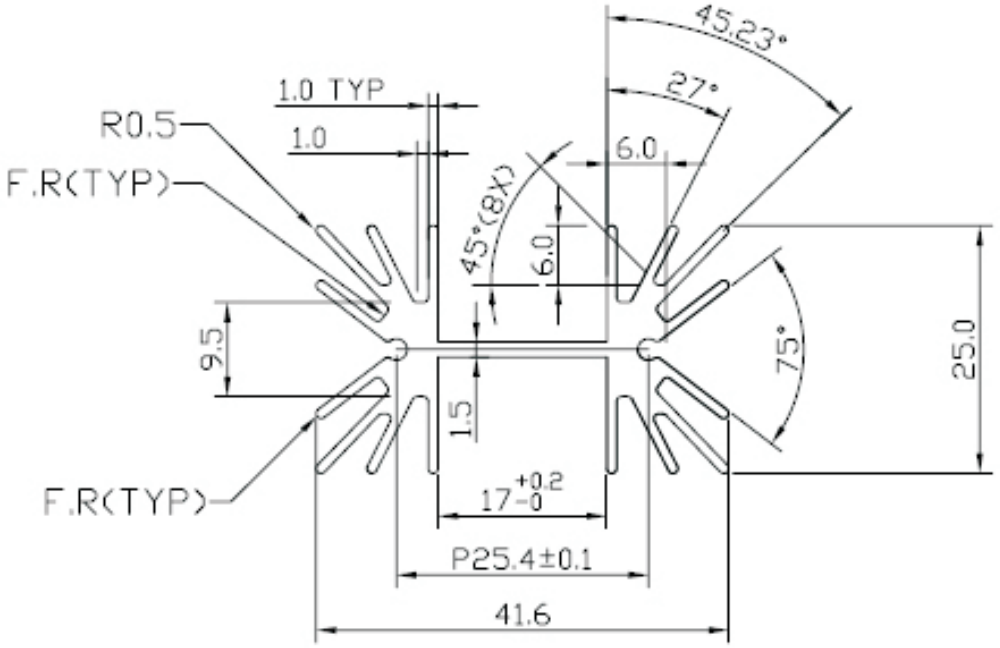

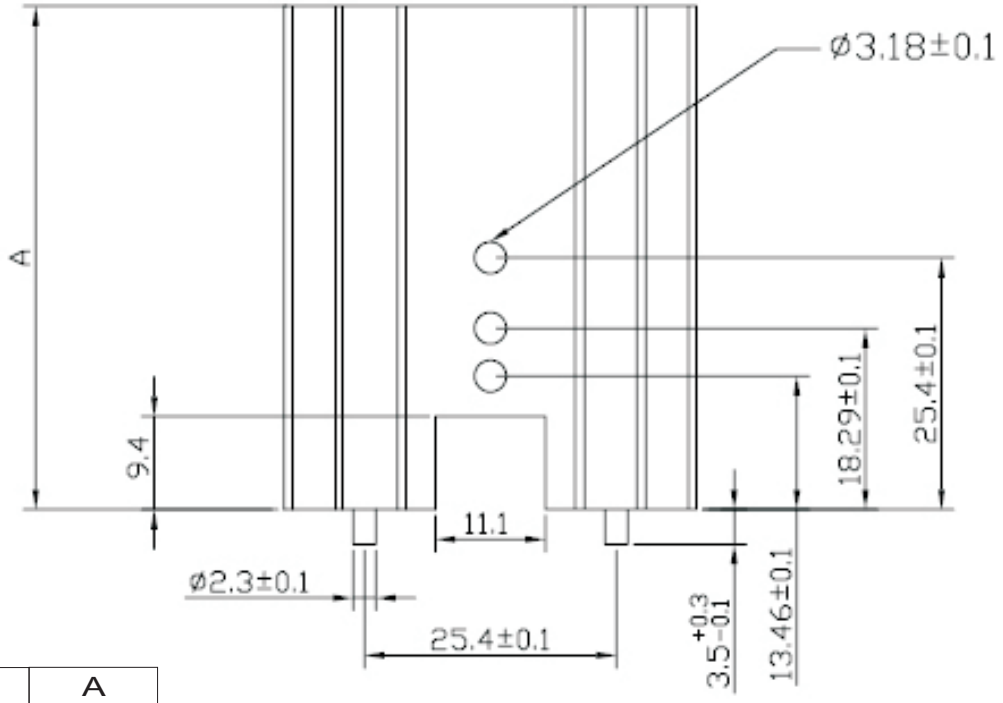

SYMBOL	A
HS-142-25	25.4
HS-142-31	31.75
HS-142-38	38.1
HS-142-50	50.8
HS-142-63	63.5

STONECOLD	TOLERANCE UNIT ±0.2 .0 ± 0. .00 ± 0. .000 ± 0.	MATERIAL AL6063-T5 (TS-78488)	TITLE: HEAT SINK
		FINISHED BLACK ANODIZED	PART NO: HS-142
		SCALE:	
		DIMENSIONS IN MM	