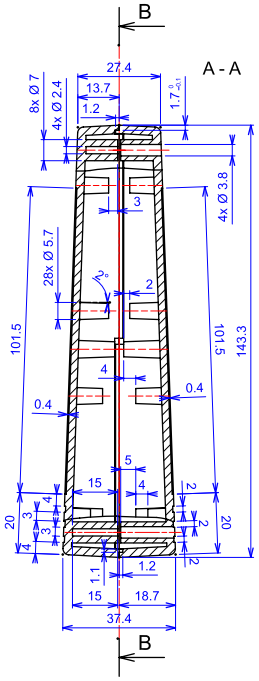

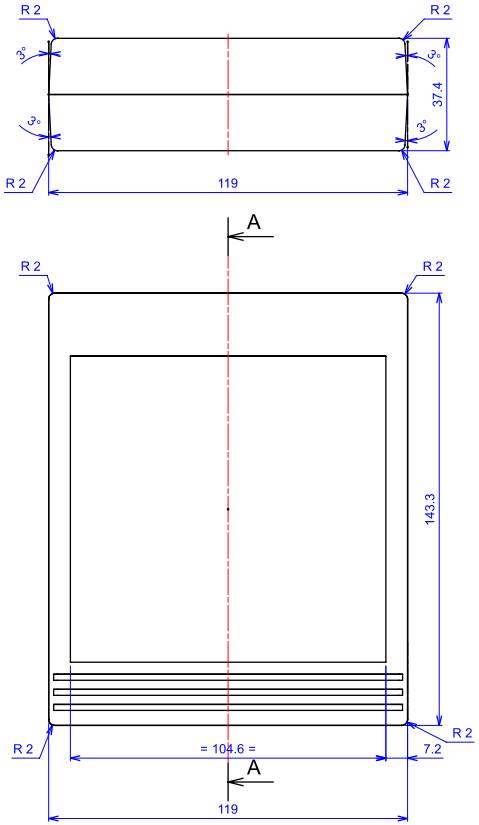

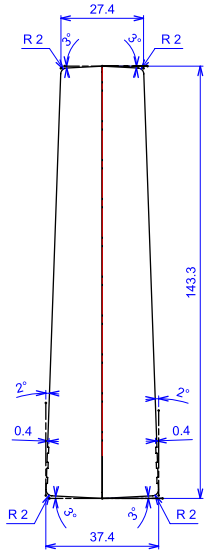

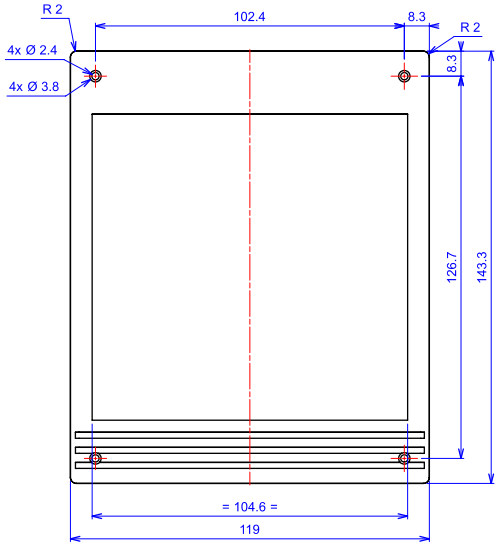

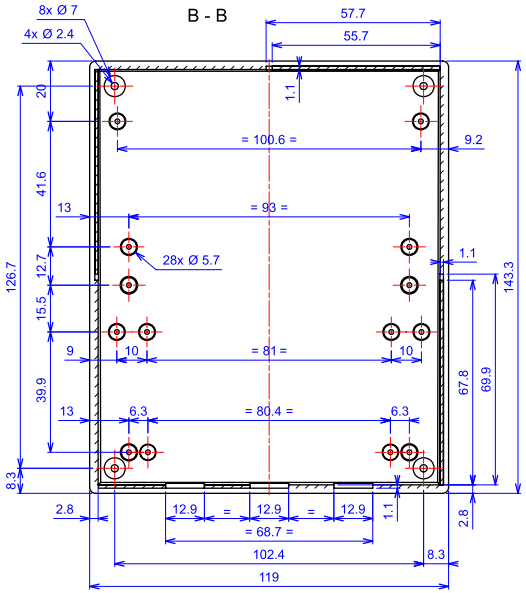

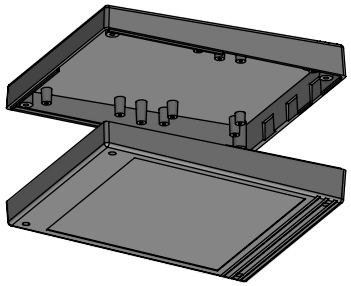

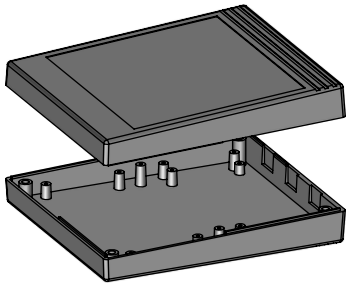

Z-28

Radiotech-Trade
(+7 495)795-08-05
www.rct.ru